HIT ME

OPERATOR'S MANUAL

Ramtek
292 Commercial Street
Sunnyvale, CA., 94086

TABLE OF CONTENTS

1. INTRODUCTION 1
2. GAME OPERATION 1
3. OPERATOR SELECTABLE OPTIONS. 5
4. BLOCK DIAGRAM DESCRIPTION. 6
5. TROUBLE SHOOTING TECHNIQUE 8

TABLE OF ILLUSTRATIONS

1. HIT ME PROCESSOR BOARD . . . . . FIGURE 1
2. BLOCK DIAGRAM . . . . . FIGURE 2
3. CABINET REAR VIEW. . . . . FIGURE 3
4. CABLE SCHEMATIC 550750A
5. T.V. MONITOR . . . . . FIGURE 4

1.0 INTRODUCTION

1.1 Hit Me is another Ramtek Amusement Device which is engineered to provide the highest degree of reliability using the most advanced techniques available. All solid state circuitry insures years of dependable service.

Hit Me is a one to four player game in which each player is matched against a dealer. Initially each player is given a number of chips ranging from 5-40 and is allocated a number of hands also ranging from 5-40. The card game played is 21 in which the object is to come as close to a total point count of 21 without exceeding it.

2.0 GAME OPERATION

2.1 Initially each player drops a coin into the coin drop slot. For each coin dropped a player is entitled to a number of chips and hands ranging from 5 to 40 in steps of 5 depending on the setting of switches located on the game processor board. (See Section 3) The games are set at the factory initiating with 40 chips and 5 hands. The first coin dropped results in a coin sound and a display on the upper right hand TV screen as follows:

	CHIPS	HANDS
#1		

The second coin dropped would add #2 underneath the #1 message. If four coins are dropped, the game automatically begins. If less than four coins are dropped, the start button must be pushed to start a game. Once the game has started, the number of chips and hands available for each player appears. For instance, in the four player case the display would be:

	CHIPS	HANDS
#1	40	5
#2	40	5
#3	40	5
#4	40	5

Next, "ANTE UP" appears on the upper left hand screen and "ANTE 00" appear across the screen, one for each hand. At this point a delay occurs which allows each player to Ante the desired number of chips by pressing his respective Ante button. Antes are automatically in groups of 10 chips until the player's supply is down to 20 at which time they are incremental. For each chip anted, a corresponding number is subtracted from the players supply shown in the upper right hand section of the screen. If no one antes for a set period, the game automatically antes the minimum possible (10 or 1 depending on player's supply) and then the cards are shuffled while the message "SHUFFLE IN PROGRESS" appears. Following the shuffle the cards are dealt, two cards face up to each player and one card up and one down to the dealer. Then a flashing "NEXT" appears above the first players cards and the message "FOR ANOTHER CARD, PUSH HIT. TO STOP, PUSH STAND."

Approximately 7 seconds are allowed the first player to decide whether to Hit or Stand. If no action is taken cards will automatically be dealt to the player until he busts or achieves 21. If the player hits, another card is dealt to him face up. If the sum of his three cards is still below 21, the flashing "NEXT" sign appears for him to again decide to hit or stand. This continues until the player either stands, busts, or five cards are dealt totaling below or equal to 21. In the latter case, the player is automatically awarded 21 and stands. Once the player busts, stands, or achieves an automatic 21, the flashing "NEXT" sign appears above the next players cards and the process is repeated. Note that an ace can count as either 11 or 1 and the machine will automatically give 11 points to the ace unless it is necessary to give it a value of 1 in order to prevent busting.

Once all the players have made their final decisions and have been dealt all their cards, the dealer down card is shown and additional cards are automatically dealt to the dealer if necessary until he either busts or achieves a score of 17 or greater, in which case the dealer automatically stands.

Next, one of the following messages appear depending on the dealers score.

a) If the dealer busts (dealers score exceeds 21).
   "DEALER PAYS ALL BUT BUSTS, NATURALS PAY 2-1"
b) Dealers score is 17-20 inclusive.
   "DEALER PAYS___OR BETTER NATURALS PAY 2-1"

c) Dealer score is 21 but is not a natural. A natural is a score of 21 achieved with an ace and a 10 value card.
"DEALER PAYS NATURALS ONLY, NATURALS PAY 2-1"

d) Dealer has a natural.
"DEALER PUSHES NATURALS"

Next, above each player's cards appears one of the following messages, depending on how the player fared.

"WIN", "LOSE", "PUSH"

The players that win then receive their initial bet plus winnings and those that pushed receive their initial bet. Then, "ANTE UP" appears again and another hand begins. A player can bet all his available chips up to a maximum of 200 chips.

The game is over when all the hands available have been used or when every player has used all his chips. At this time, the following message appears:

"GAME OVER, INSERT 25¢ FOR EACH PLAYER, PUSH START"

During the course of the game, the cards are not re-shuffled until all 52 cards have been played.

In later HIT ME games an attract sequence follows the game over message.

3.0 OPERATOR SELECTABLE OPTIONS

3.1 The characteristics of the game which can be altered by the operator are:

1) Number of chips each player starts with at the beginning of a game.
2) The number of hands available for each game.
3) Whether or not a free hand is given on naturals.
4) The overall speed of the game, that is, the time allowed for decisions, dealing speed, etc.
5) The width of the cards dealt.

A component top view of the microprocessor board used on Hit Me is shown in FIGURE 1.

The chart below explains the settings of the 8 switches on the DIP switch.

A plus in a column means the toggle switch is up on the plus side of the DIP.

SW	123	No. of Chips	456	No. of Hands
	000	5	000	5
	+00	10	+00	10
	0+0	15	0+0	15
	++0	20	++0	20
	00+	25	00+	25
	+0+	30	+0+	30
	0++	35	0++	35
	+++	40	+++	40

3.0 OPERATOR SELECTABLE OPTIONS

3.1 The characteristics of the game which can be altered by the operator are:

1) Number of chips each player starts with at the beginning of a game.
2) The number of hands available for each game.
3) Whether or not a free hand is given on naturals.
4) The overall speed of the game, that is, the time allowed for decisions, dealing speed, etc.
5) The width of the cards dealt.

A component top view of the microprocessor board used on Hit Me is shown in FIGURE 1.

The chart below explains the settings of the 8 switches on the DIP switch.

A plus in a column means the toggle switch is up on the plus side of the DIP.

SW	123	No. of Chips	456	No. of Hands
	000	5	000	5
	+00	10	+00	10
	0+0	15	0+0	15
	++0	20	++0	20
	00+	25	00+	25
	+0+	30	+0+	30
	0++	35	0++	35
	+++	40	+++	40

When switch 7 is up on the plus side of the DIP a natural gives a player an extra free hand. Switch 8 is not used.

The pot close to the DIP switch in FIGURE 1 controls the overall game speed (clockwise rotation looking from edge connector end of the board slows the game). The other pot on the board controls the card width (clockwise rotation looking from edge connector end of the board makes the cards dealt narrower).

4.0 BLOCK DIAGRAM

4.1 A block diagram in FIGURE 2 describes the interconnection of the major components of a Hit Me game.

Front Panel Controls---the front panel controls consists of an "ANTE", "HIT", and "STAND" button for each of four potential players.

The coin drop box contains three signals for the processor board. Besides the COIN drop signal, the START and TILT signals originate here.

The coin drop signal also supplies a pulse for the coin counter.

The TV monitor plug receives video and audio signals from the processor board. The monitor amplifies the audio received from the processor board and transmits it to the speaker. Additionally, the monitor provides the +5 Volt power needed by the processor board.

The Filter, Transformer block provides 115V to the TV monitor as well as 12V AC to the processor board. The processor board converts the 12V AC to +12V DC and -5V DC for use by logic elements on the board.

The heart of the microprocessor board is the 8080 microprocessor. Signals to and from this 40 pin unit can be separated into four categories. They are:

1) Power +5V, -5V, +12V, GROUND.
2) Sixteen Address Lines---addressing memory and switch status.
3) Eight Bidirectional Data Lines over which information going to the 8080 and coming from the 8080 travel.
4) Hand Shake Lines---the sole purpose of these lines is to communicate between the 8080 and memory, or switches, the necessary timing signals indicating when address and data lines are stable with valid information.

The program which performs the functions needed to play Hit Me are located in 2048 or 2560 bytes of PROM (depending on Hit Me serial number).

In addition, 1536 bytes of RAM contain information for the TV screen display. Another 256 bytes of RAM are used as temporary storage for the 8080.

5.0 TROUBLE SHOOTING TECHNIQUES

5.1 Make sure the power cord is plugged in the wall socket and the interlock switch is ON. The interlock switch is on when it is fully depressed---this requires the back cover to maintain closure; or when the switch is pulled fully out---maintains self in this position.

Check all four fuses in the game---the system power fuse located on the transformer filter board and three fuses mounted on the TV monitor.

Check the brightness and contrast control on the monitor and turn them in the direction to give maximum brightness and contrast. Adjust the Vertical and Horizontal Holds if necessary.

Disconnect the edge connector from the processor board and touch pins M and 11 on connector with your fingers. This should put random lines on the screen indicating that the monitor functions properly.

With the sound control on the monitor set to maximum output touch pin L with your fingers. If you hear a sound, any problem with sound is probably on the processor board, otherwise it is probably in the monitor.

Whenever the game malfunctions, the +5V, -5V and +12V DC supplies should be checked. Use any standard voltmeter. The +5V can be measured by using any two buss bars bracketing each row of IC's. Plus 5V, -5V, and +12V and GND points are etched on the PC board in the lower left hand corner section shown in FIGURE 1 where the +12V and -5V are generated. Remember, the +5V is coming from the TV monitor. Be careful not to short these supplies when making measurements.

If the +5V is out of specification, that is below 4.75 or above 5.25, disconnect the processor board from its edge connector after power has been shut down. After turning power back on, check the 5V between pins 1 and A on the connector. If the supply is still out of spec. adjust the 5V supply output by turning the pot on the small PC board on the monitor located just behind the monitor power transformer. If the 5V is not there at all check the fuse soldered in on the monitor located near the power transformer. If the +5V is alright when the processor board is disconnected but is below spec. once it is connected, something on the processor board is overloading the supply or the +5V supply in the monitor is not able to supply its rated 3A.

If the +12V or -5V supplies or both are out of spec. (+12V $\pm$ 5%, or -5V $\pm$ 5%) check to see if the 12.6 V AC input to the processor board is within spec. (12.6V $\pm$ 2V AC). This voltage comes in on pins 15 and 14. Be careful not to short these pins. If this voltage alright, something is wrong with the processor board voltage regulators or they are being overloaded with a malfunctioning chip on the board.

In any case, another processor board should replace the one with the problem.

Trouble shooting the processor board to a point further than this is beyond the scope of this manual.

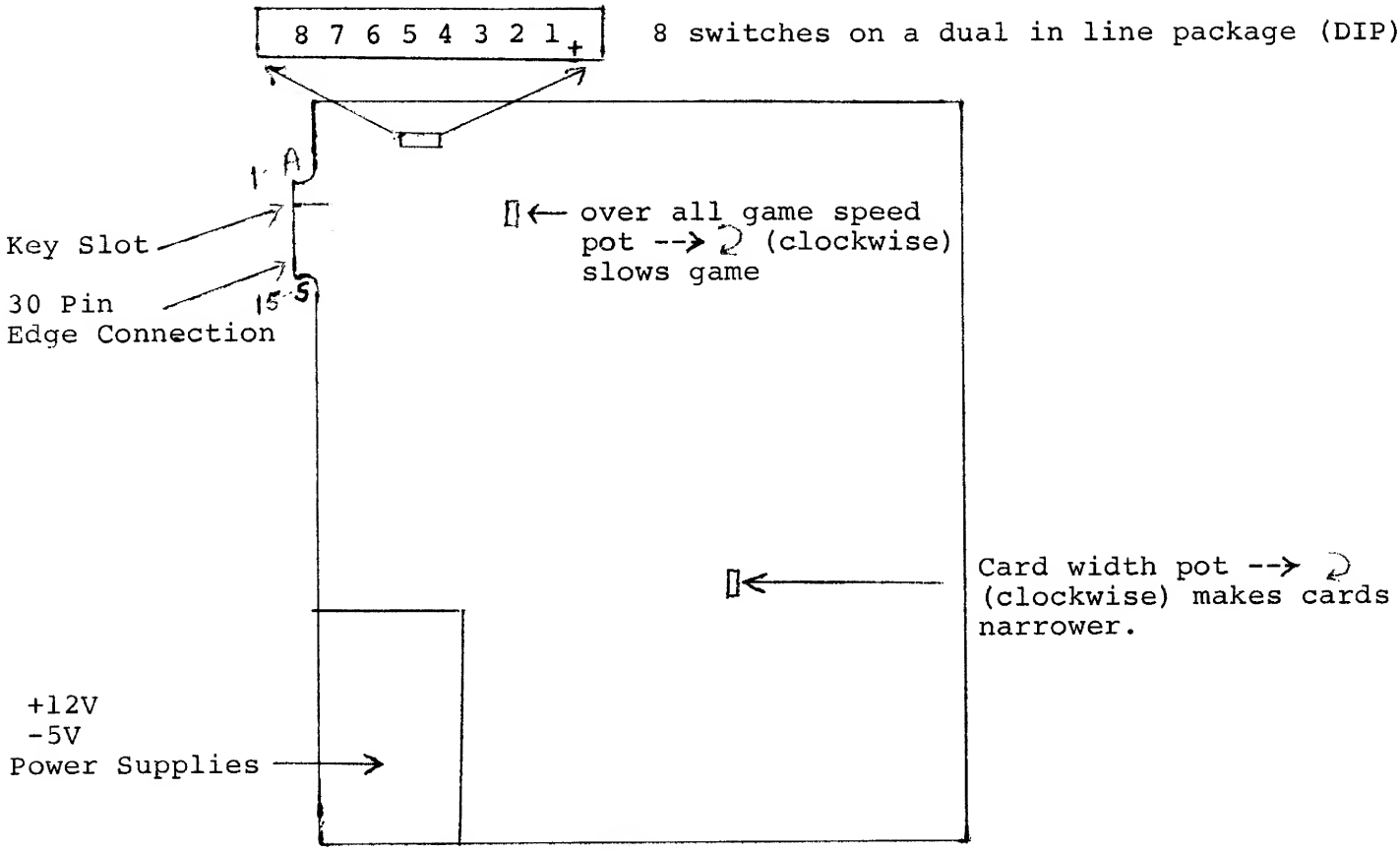

HIT ME PROCESSOR BOARD FIGURE 1

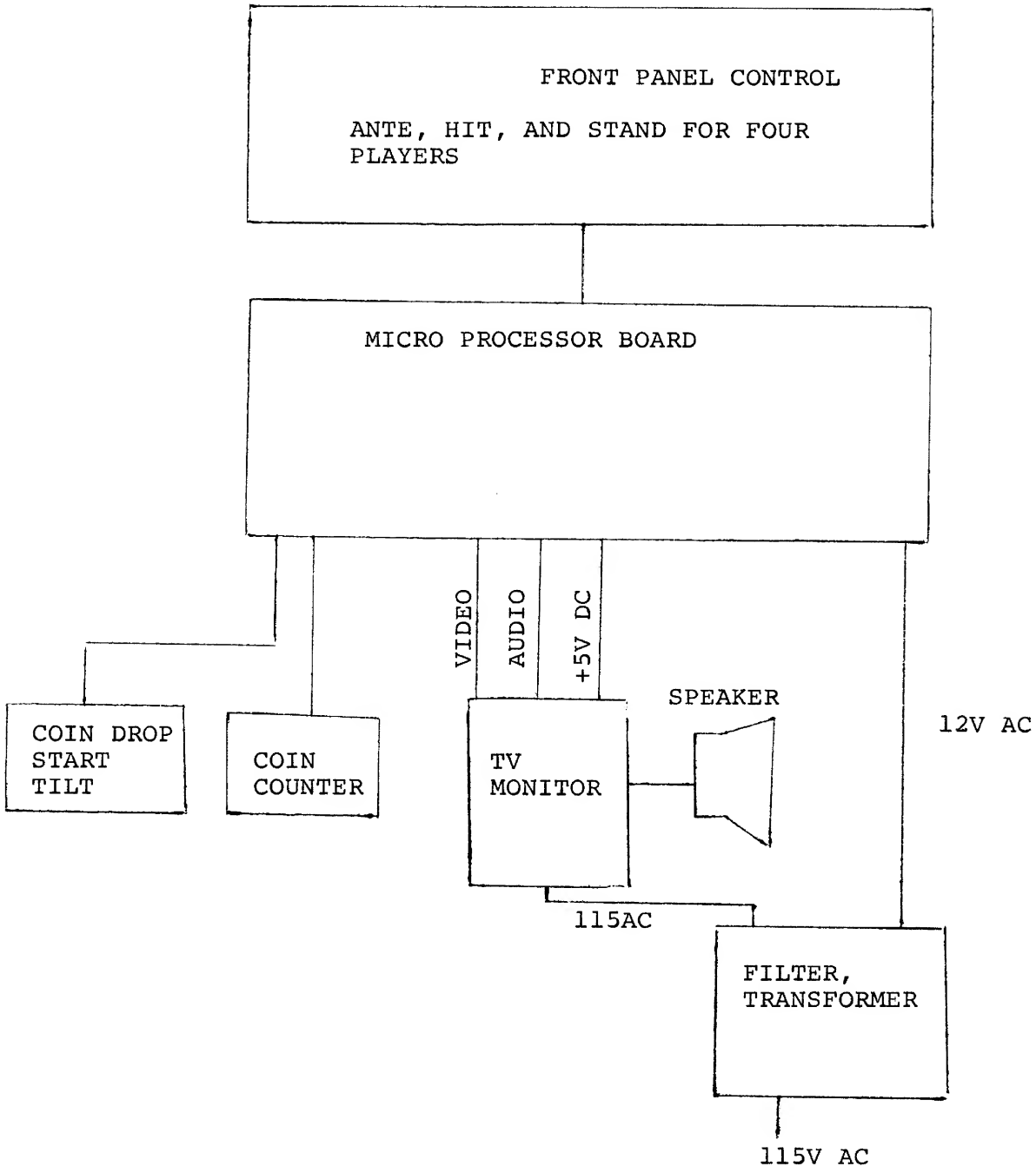

HIT ME BLOCK DIAGRAM FIGURE 2

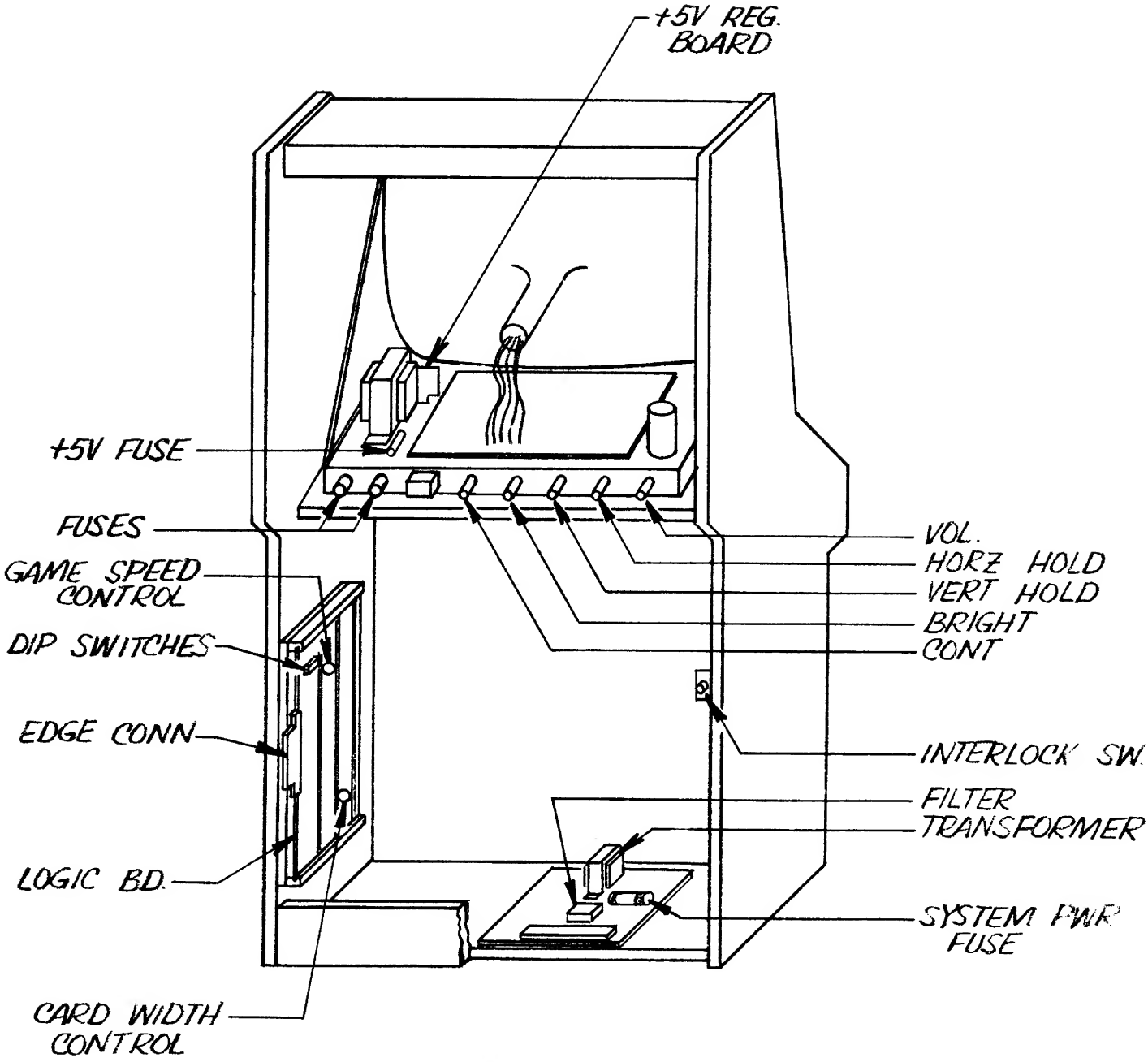

—REAR VIEW—
"HIT ME" CABINET

-FIGURE 3-

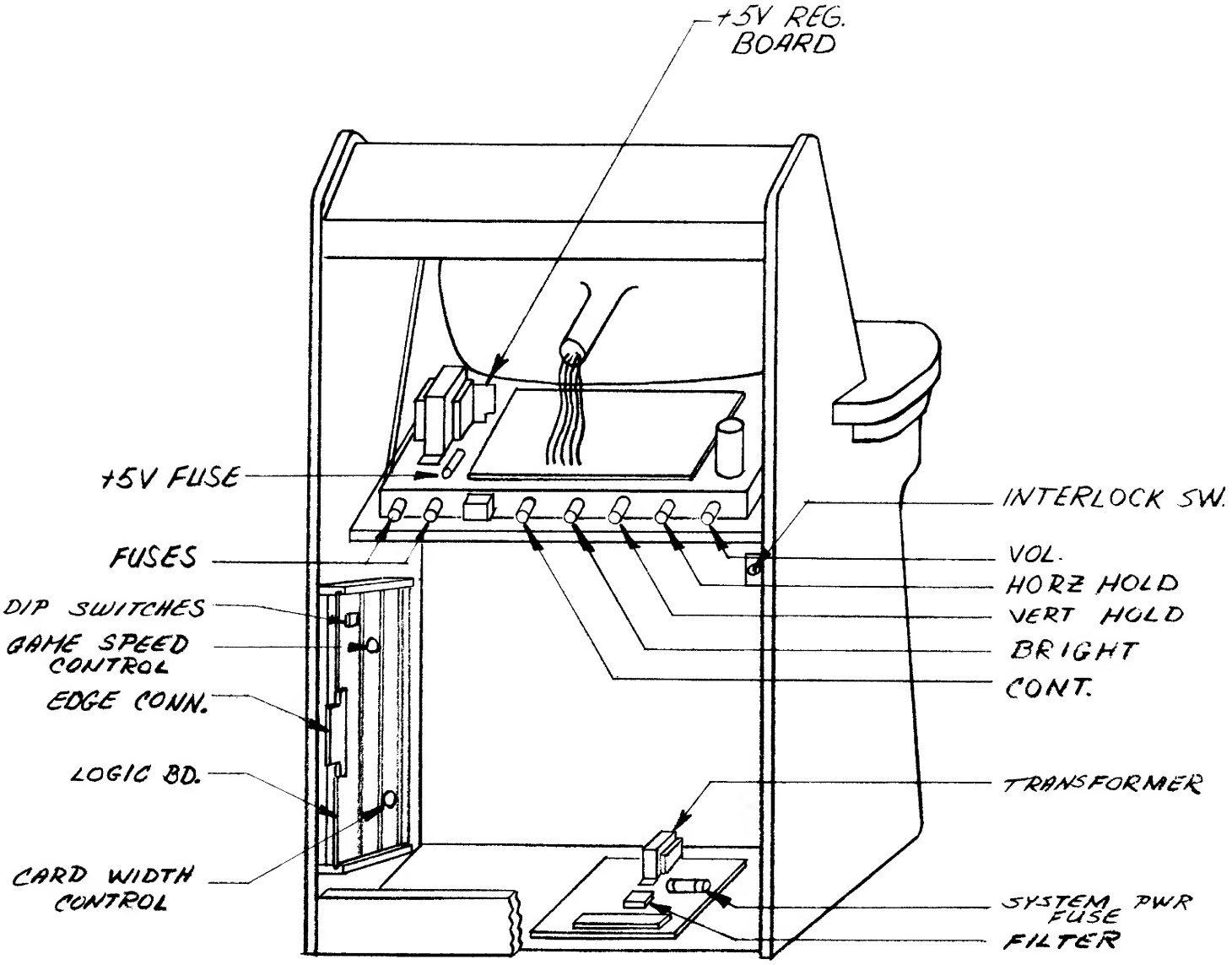

—REAR VIEW—

"HIT ME" DESIGNER TABLE

—FIGURE 3—

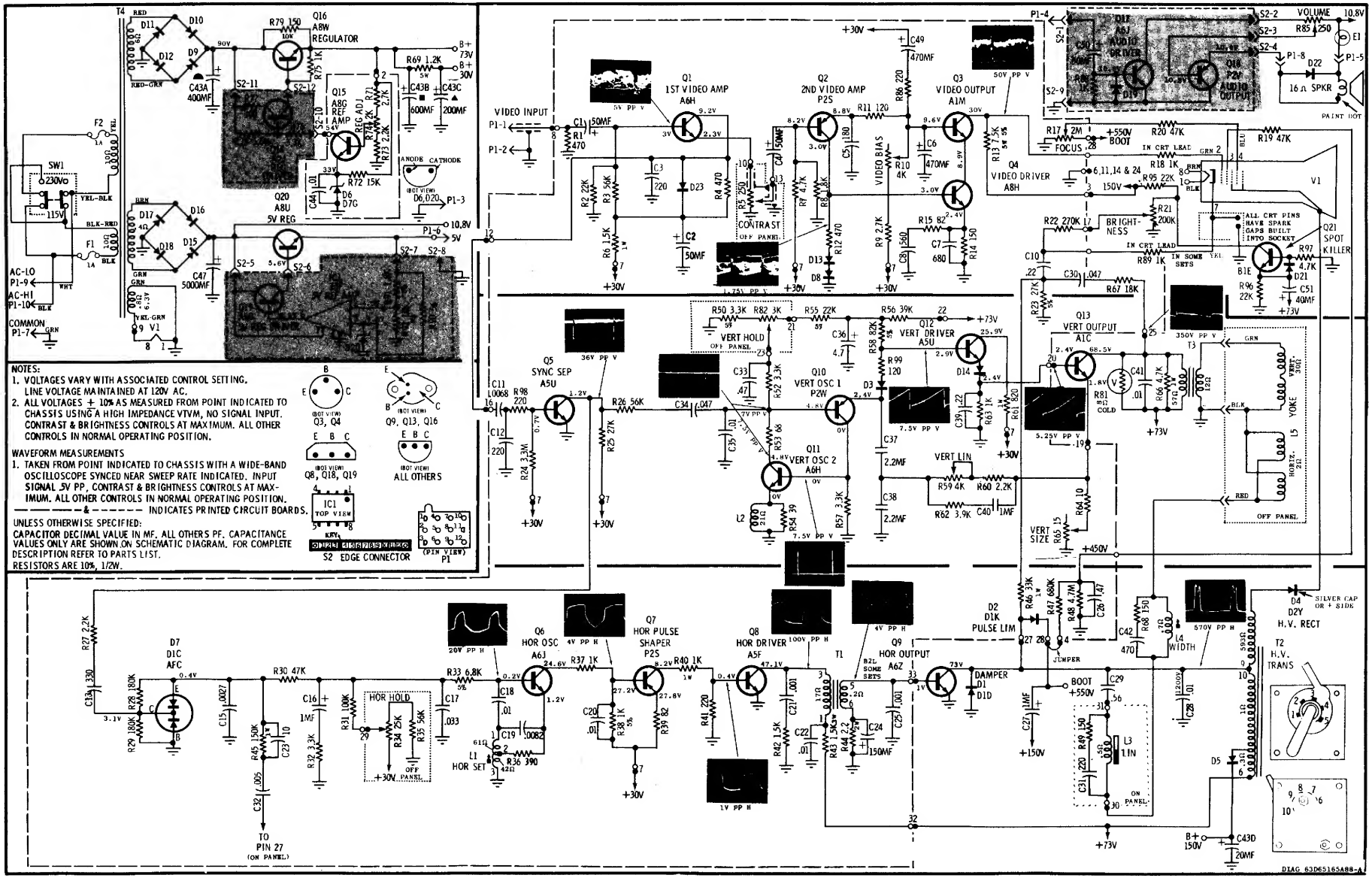

FIGURE 4: T.V. MONITOR
Schematic Diagram

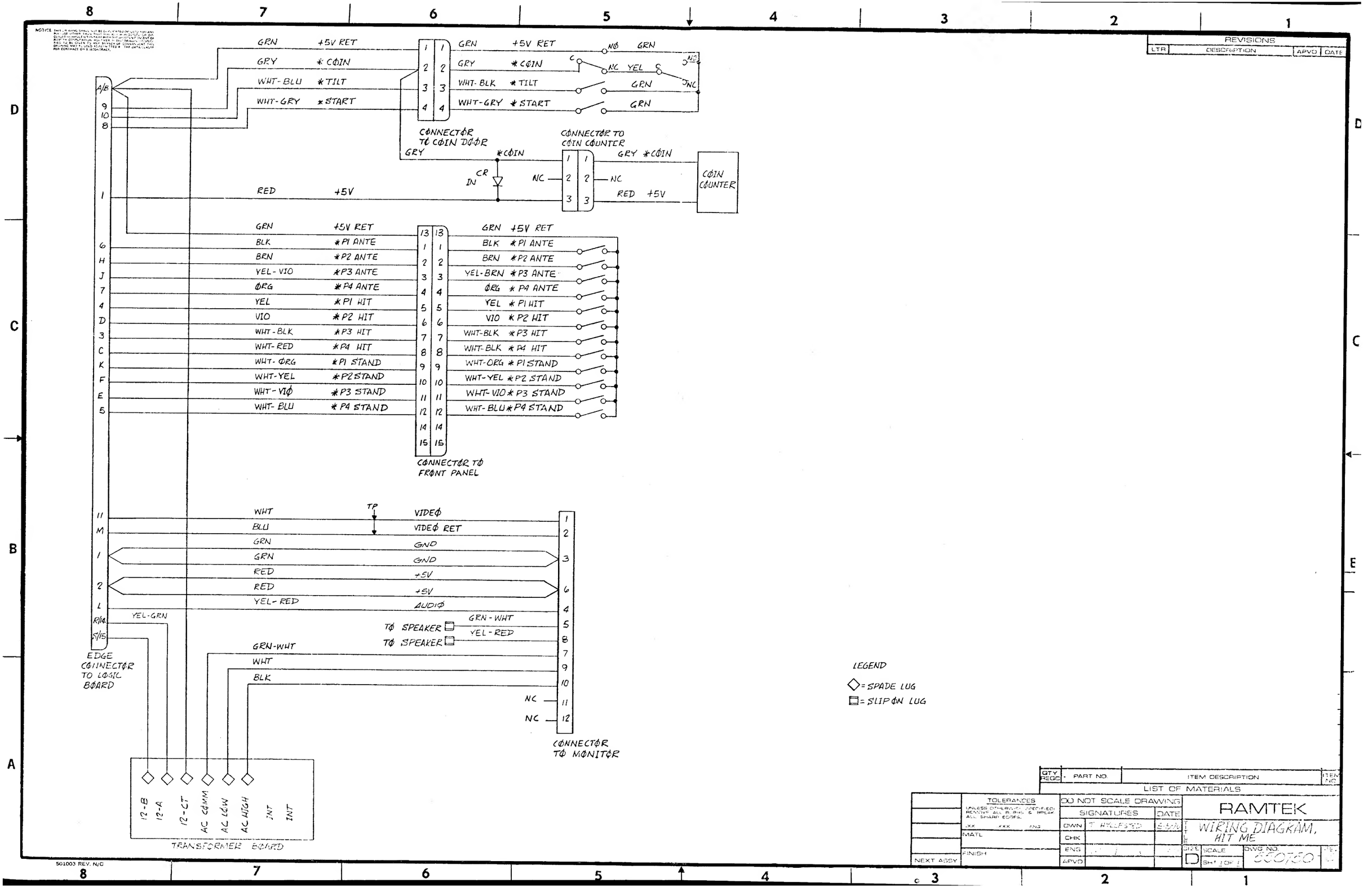

REVISIONS
LTR
DESCRIPTION
APVD
DATE
GRN +5V RET
GRY *COIN
WHT-BLU *TILT
WHT-GRY *START
CONNECTOR TO COIN DOOR
NO GRN
NC YEL
GRN
GRN
CONNECTOR TO COIN COUNTER
GRY *COIN
CR IN
NC
RED +5V
COIN COUNTER
BLK *P1 ANTE
BRN *P2 ANTE
YEL-VIO *P3 ANTE
ORG *P4 ANTE
YEL *P1 HIT
VIO *P2 HIT
WHT-BLK *P3 HIT
WHT-RED *P4 HIT
WHT-ORG *P1 STAND
WHT-YEL *P2 STAND
WHT-VIO *P3 STAND
WHT-BLU *P4 STAND
CONNECTOR TO FRONT PANEL
TP
WHT VIDEO
BLU VIDEO RET
GRN GND
RED +5V
YEL-RED AUDIO
YEL-GRN
TO SPEAKER
GRN-WHT
YEL-RED
EDGE CONNECTOR TO LOGIC BOARD
NC
CONNECTOR TO MONITOR
12-B
12-A
12-CT
AC COMM
AC LOW
AC HIGH
INT
TRANSFORMER BOARD
LEGEND
◇ = SPADE LUG
□ = SLIP ON LUG
QTY REQD
PART NO.
ITEM DESCRIPTION
ITEM NO.
LIST OF MATERIALS
TOLERANCES
DO NOT SCALE DRAWING
SIGNATURES
DATE
DWN
CHK
ENG
APVD
MATL
FINISH
NEXT ASSY
RAMTEK
WIRING DIAGRAM, HIT ME
SIZE D
SCALE
SHT 1 OF 1
DWG NO.
501003 REV. N/C

REVISIONS			
LTR	DESCRIPTION	APVD	DATE
B	RELEASE FOR PROD.		
C	RELEASE FOR PROD		

COLUMN, LINE, ROW COUNTERS

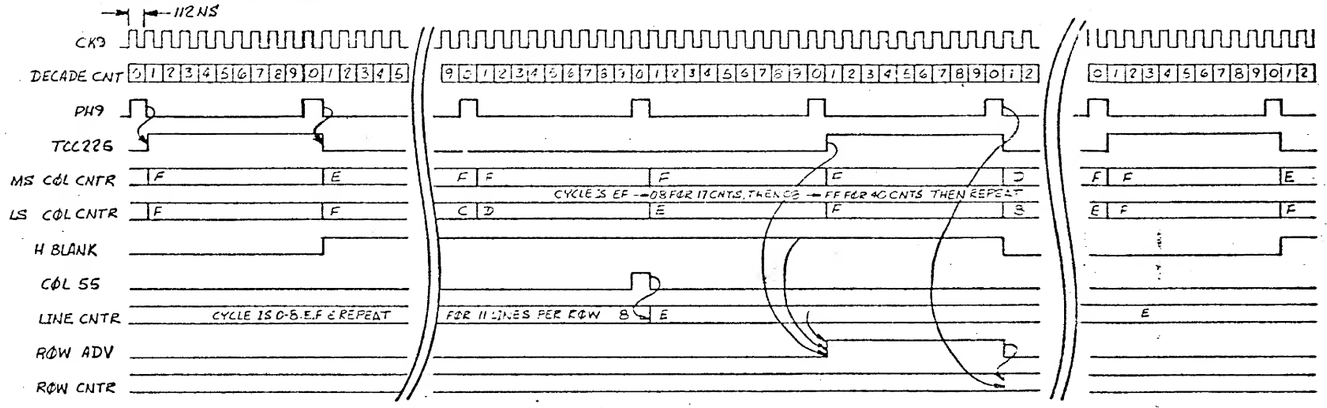

	H BLANKING	VISIBLE COLUMNS
COLUMN COUNTER	EF - (17 CNTS) - 08 - (40 CNTS) - EF	
LINE COUNTER	0-8, E, F (11 LINES/ROW)	
ROW COUNTER	FB - (5 CNTS) - ED - (19 CNTS) - FB	
	V BLANKING	VISIBLE ROWS

CK9 TIME IS 112 NS
PH9 TO PH9 IS 10X112 NS = 1.12 uS
H BLANK TIME IS 1.12 X 17 = 19.04 uS
VISIBLE COL TIME IS 1.12 X 40 = 44.80 uS
H BLANK TO H BLANK = 63.94 uS
VERTICAL BLANK TIME IS 5X11 X 63.84 = 3.51 uS
VERTICAL BLANK TO VERTICAL BLANK IS 24X11 X 63.84 = 16.87 uS

HORIZONTAL BLANKING

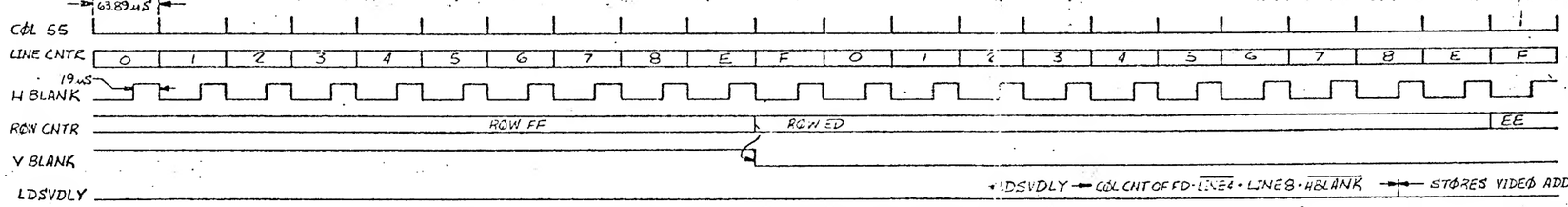

VERTICAL BLANKING

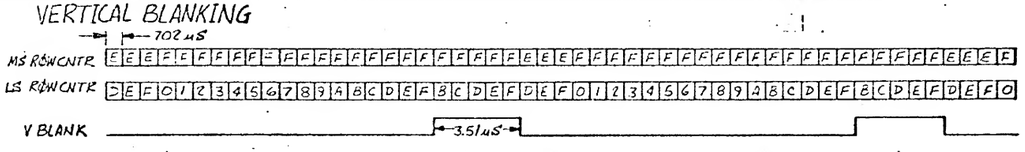

PHASE 1, PHASE 2 TIMING

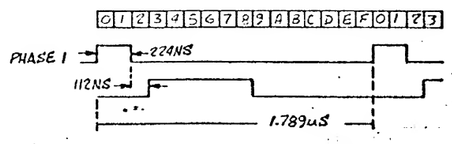

QTY REQ'D	PART NO.	ITEM DESCRIPTION	ITEM NO
LIST OF MATERIALS			

TOLERANCES UNLESS OTHERWISE SPECIFIED REMOVE ALL BURRS & BREAK ALL SHARP EDGES. .XX .XXX ANG	DO NOT SCALE DRAWING	RAMTEK	
	SIGNATURES / DATE		
MATL	DWN T HYLLESTED 4-27-83	TIMING DIAGRAM, HIT ME	
FINISH	CHK		
NEXT ASSY	ENG [illegible] 5-16-83	SIZE D	DWG NO 550594 REV C
	APVD	SHT 1 OF 5	

501003 REV A

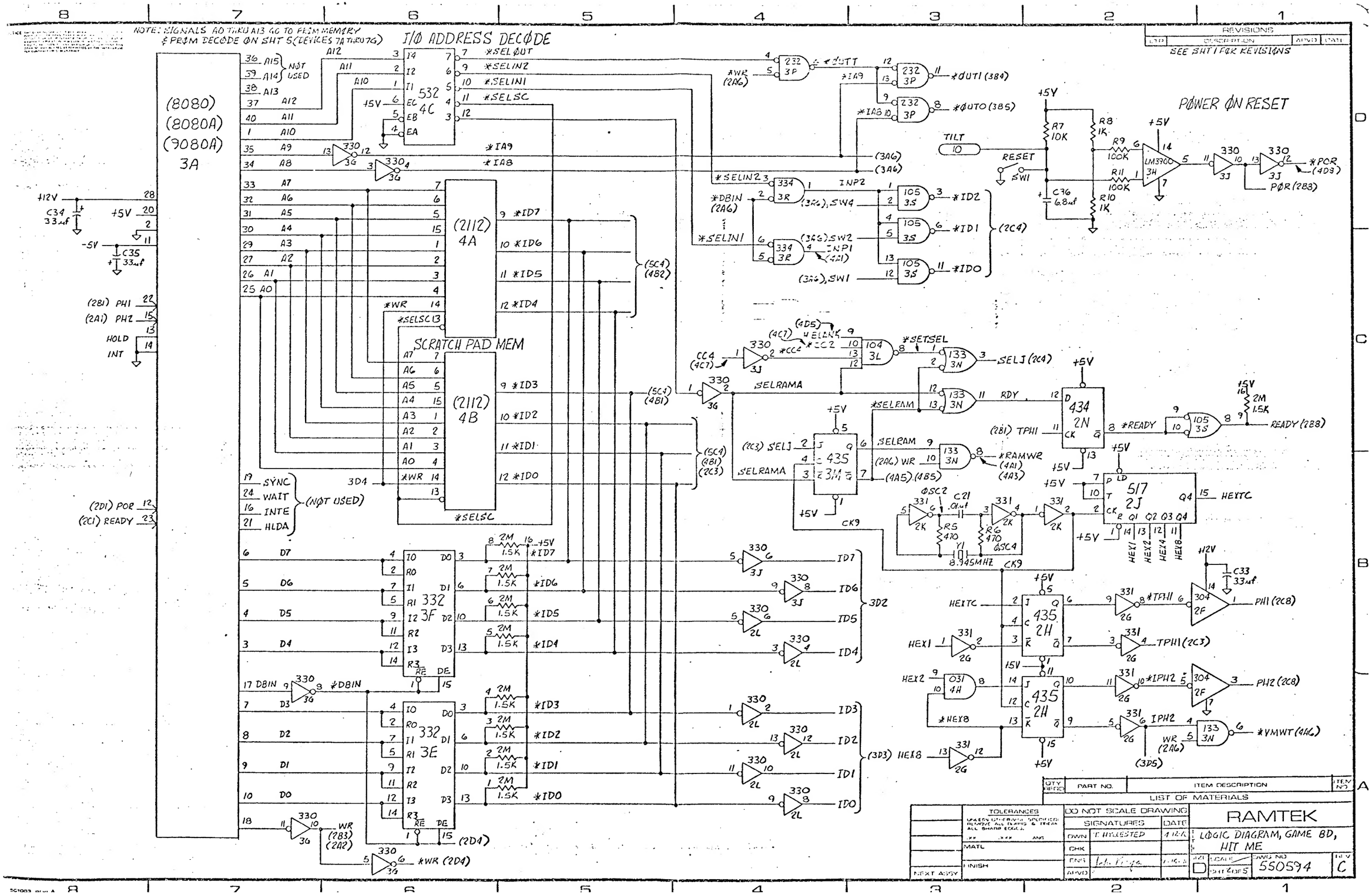

NOTE: SIGNALS A0 THRU A13 GO TO PROM MEMORY & PROM DECODE ON SHT 5 (DEVICES 7A THRU 7G)
I/O ADDRESS DECODE
(8080)
(8080A)
(9080A)
3A
NOT USED
532 4C
(2112) 4A
(2112) 4B
SCRATCH PAD MEM
332 3F
332 3E
POWER ON RESET
LM3900 3H
TILT
RESET
SW1
SELRAMA
SELRAM
SELJ
SELJ (2C4)
RDY
*READY
READY (2B8)
*RAMWR
*SETSEL
*SELSC
*SELIN1
*SELIN2
*SELOUT
*IA9
*IA8
*DBIN
*WR
*ID7
*ID6
*ID5
*ID4
*ID3
*ID2
*ID1
*ID0
*POR
POR (2B3)
*TPH1
PH1 (2C8)
TPH1 (2C3)
*IPH2
PH2 (2C8)
IPH2
*VMWT (4A6)
HEXTC
HEX1
HEX2
HEX8
*HEX8
ID7
ID6
ID5
ID4
ID3
ID2
ID1
ID0
3D2
(3D3)
(2D4)
*WR (2D4)
WR (2B3) (2A2)
(2D1) POR
(2C1) READY
(2B1) PH1
(2A1) PH2
HOLD
INT
SYNC
WAIT
INTE
HLDA
(NOT USED)
+12V
-5V
+5V
C34 33uf
C35 33uf
C36 6.8uf
C33 33uf
C21 .01uf
R5 470
R6 470
Y1 8.945MHZ
REVISIONS
SEE SHT 1 FOR REVISIONS
QTY REQD
PART NO.
ITEM DESCRIPTION
ITEM NO
LIST OF MATERIALS
TOLERANCES
DO NOT SCALE DRAWING
SIGNATURES
DATE
DWN T. HYLLESTED
CHK
ENG
APVD
MATL
FINISH
NEXT ASSY
RAMTEK
LOGIC DIAGRAM, GAME BD, HIT ME
SIZE D
SCALE
SHT 2 OF 5
DWG NO 550594
REV C

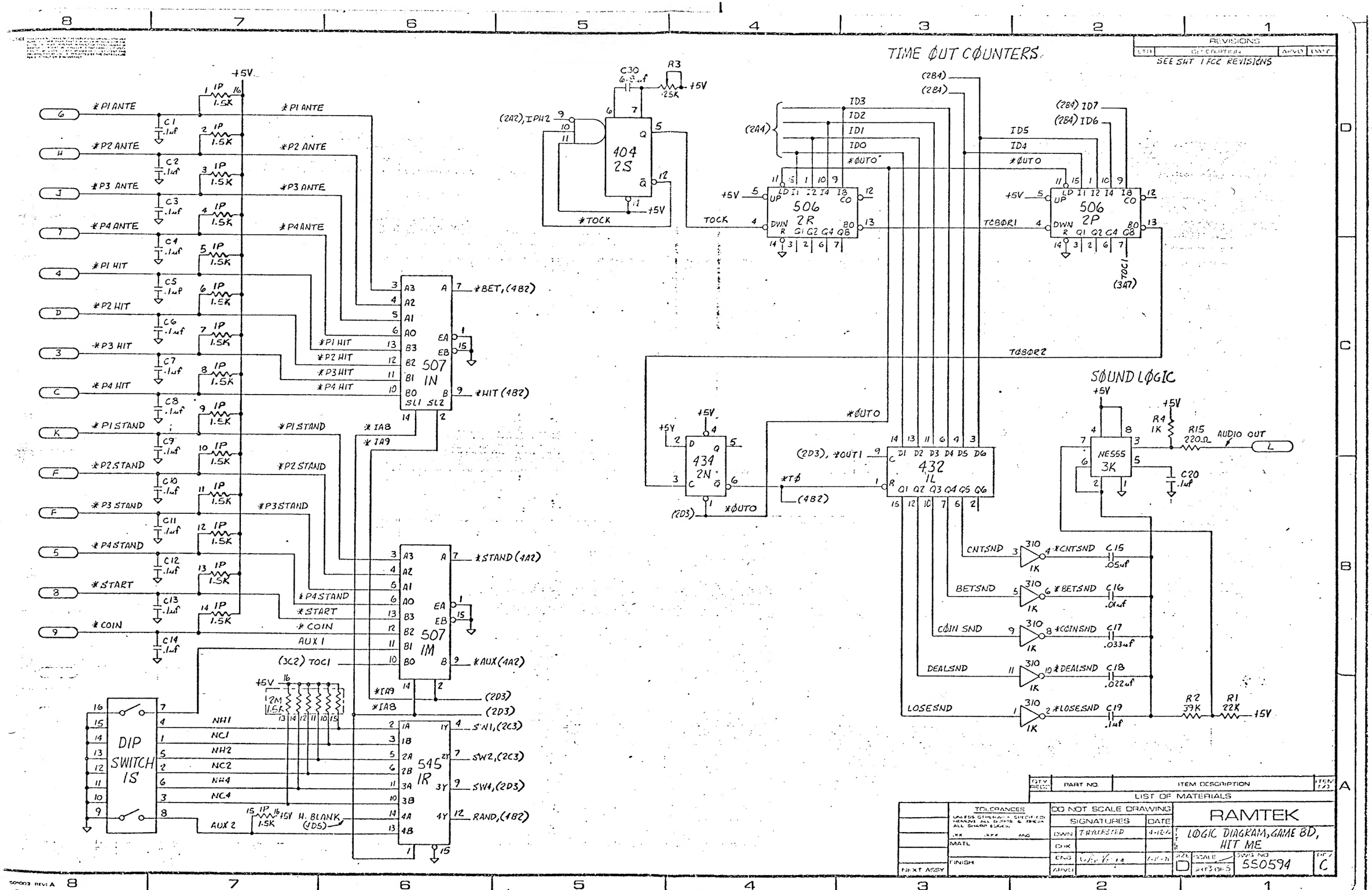
TIME ØUT CØUNTERS
SEE SHT 1 FOR REVISIONS
REVISIONS
SØUND LØGIC
DIP SWITCH 1S
507 1N
507 1M
545 1R
404 2S
506 2R
506 2P
434 2N
432 1L
NE555 3K
AUDIO OUT
*P1 ANTE
*P2 ANTE
*P3 ANTE
*P4 ANTE
*P1 HIT
*P2 HIT
*P3 HIT
*P4 HIT
*P1 STAND
*P2 STAND
*P3 STAND
*P4 STAND
*START
*COIN
AUX 1
AUX 2
H. BLANK (4D5)
*BET, (4B2)
*HIT (4B2)
*STAND (4A2)
*AUX (4A2)
SW1, (2C3)
SW2, (2C3)
SW4, (2D3)
RAND, (4B2)
*TOCK
TOCK
*ØUTO
TØBØR1
TØBØR2
*TØ
(2D3), *OUT1
CNTSND
BETSND
CØIN SND
DEALSND
LOSESND
*CNTSND
*BETSND
*CØINSND
*DEALSND
*LOSESND
R1 22K
R2 39K
R4 1K
R15 220Ω
C20 .1uf
C15 .05uf
C16 .01uf
C17 .033uf
C18 .022uf
C19 .1uf
LIST OF MATERIALS
PART NO.
ITEM DESCRIPTION
TOLERANCES
DO NOT SCALE DRAWING
SIGNATURES
DATE
DWN
CHK
ENG
APVD
MATL
FINISH
NEXT ASSY
RAMTEK
LØGIC DIAGRAM, GAME BD, HIT ME
SIZE D
SCALE
SHT 3 OF 5
DWG NO 550594
REV C

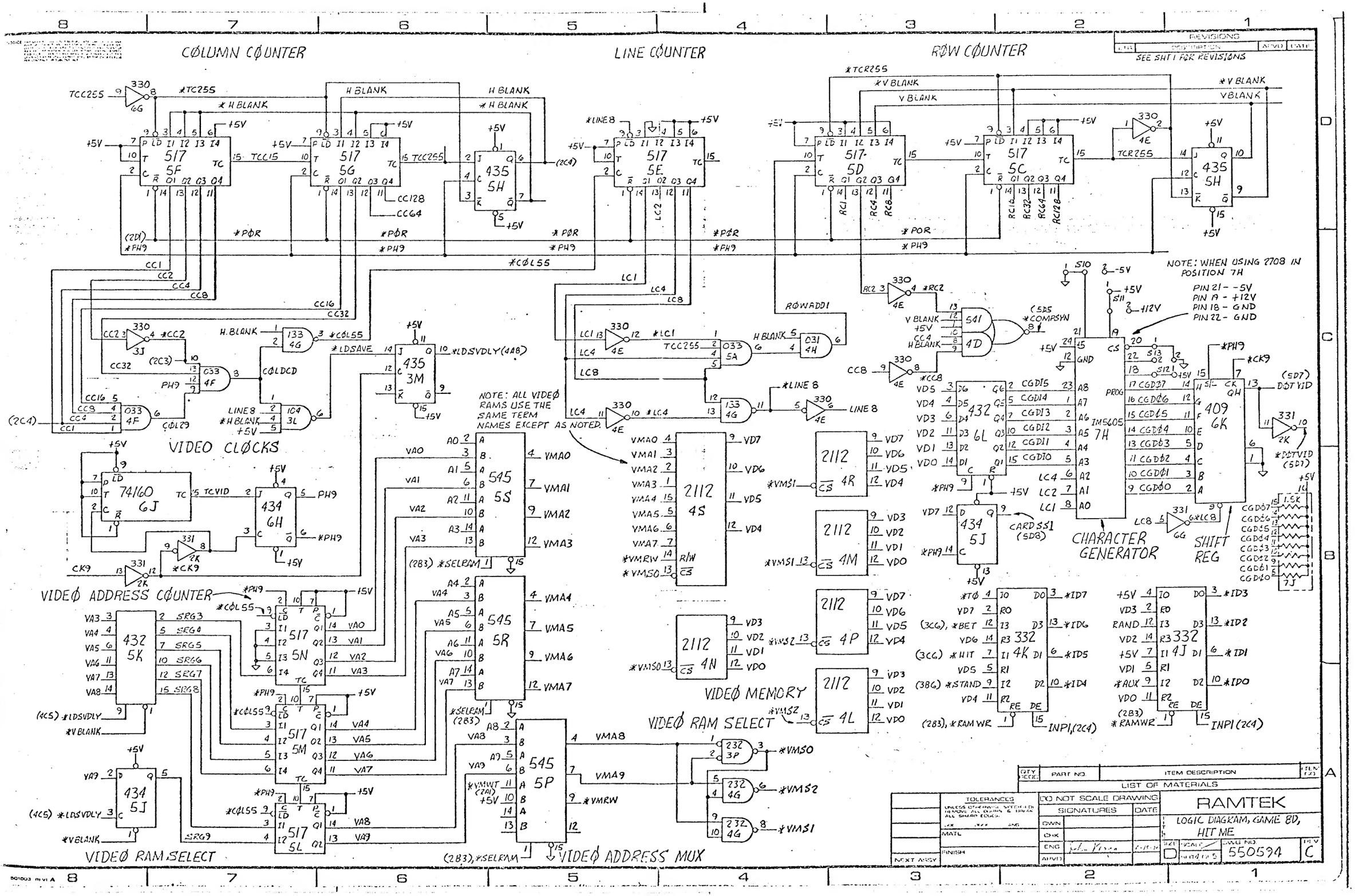

COLUMN COUNTER
LINE COUNTER
ROW COUNTER
SEE SHT 1 FOR REVISIONS
NOTE: WHEN USING 2708 IN POSITION 7H
PIN 21 - -5V
PIN 19 - +12V
PIN 18 - GND
PIN 22 - GND
NOTE: ALL VIDEO RAMS USE THE SAME TERM NAMES EXCEPT AS NOTED.
VIDEO CLOCKS
VIDEO ADDRESS COUNTER
VIDEO RAM SELECT
VIDEO MEMORY
VIDEO RAM SELECT
VIDEO ADDRESS MUX
CHARACTER GENERATOR
SHIFT REG
LIST OF MATERIALS
DO NOT SCALE DRAWING
RAMTEK
LOGIC DIAGRAM, GAME 8D, HIT ME
550594
C

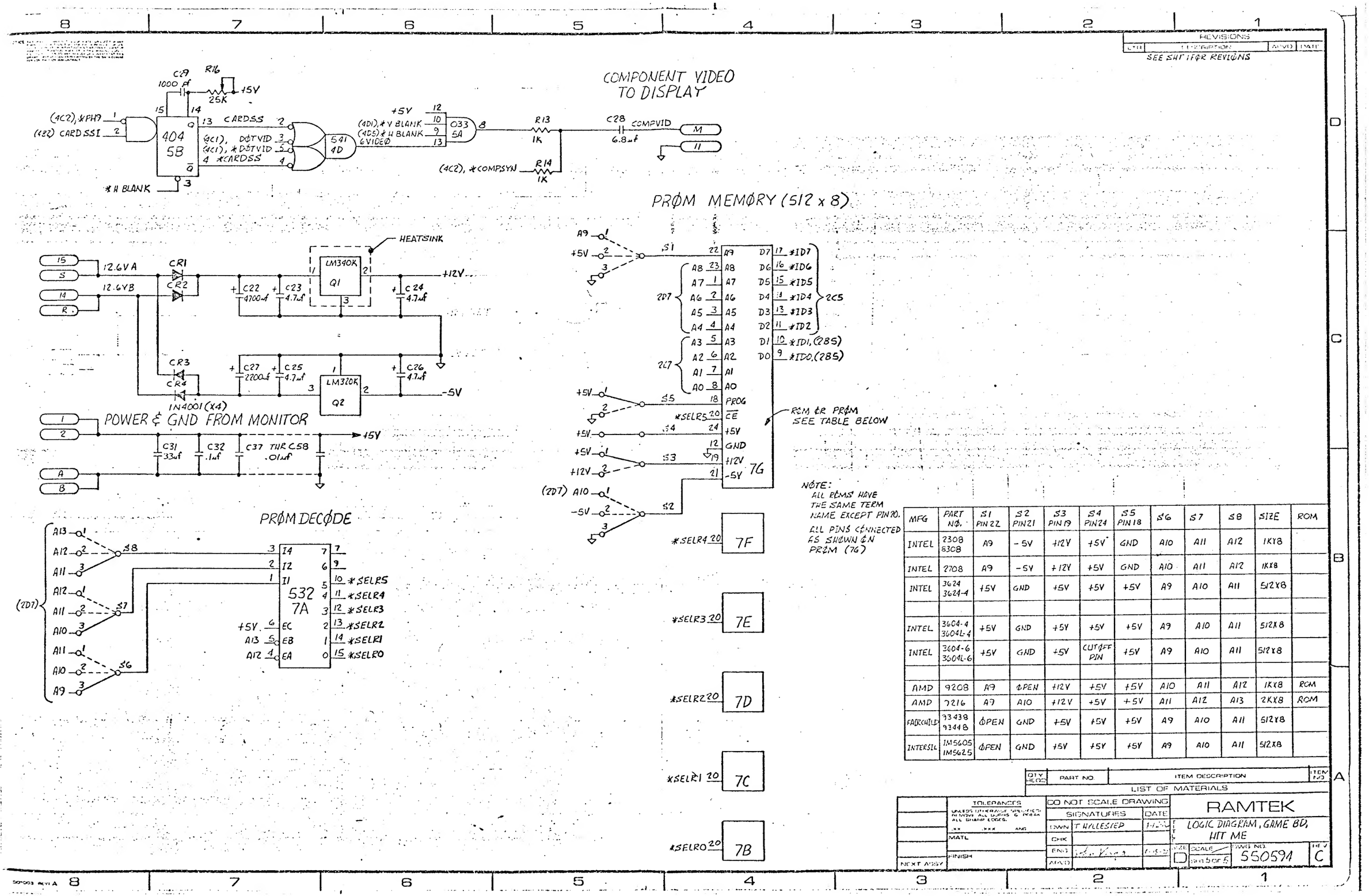

NØTE:
ALL RØMS HAVE THE SAME TERM NAME EXCEPT PIN 20.
ALL PINS CØNNECTED AS SHØWN ØN PRØM (7G)

MFG	PART NØ.	S1 PIN 22	S2 PIN 21	S3 PIN 19	S4 PIN 24	S5 PIN 18	S6	S7	S8	SIZE	ROM
INTEL	2308 8308	A9	-5V	+12V	+5V	GND	A10	A11	A12	1KX8	
INTEL	2708	A9	-5V	+12V	+5V	GND	A10	A11	A12	1KX8	
INTEL	3624 3624-4	+5V	GND	+5V	+5V	+5V	A9	A10	A11	512X8	
INTEL	3604-4 3604L-4	+5V	GND	+5V	+5V	+5V	A9	A10	A11	512X8	
INTEL	3604-6 3604L-6	+5V	GND	+5V	CUTØFF PIN	+5V	A9	A10	A11	512X8	
AMD	9208	A9	ØPEN	+12V	+5V	+5V	A10	A11	A12	1KX8	ROM
AMD	7216	A9	A10	+12V	+5V	+5V	A11	A12	A13	2KX8	ROM
FAIRCHILD	93438 93448	ØPEN	GND	+5V	+5V	+5V	A9	A10	A11	512X8	
INTERSIL	IM5605 IM5625	ØPEN	GND	+5V	+5V	+5V	A9	A10	A11	512X8	

REVISIONS
LTR | DESCRIPTION | APVD | DATE
SEE SHT 1 FØR REVIØNS

QTY REQD | PART NO. | ITEM DESCRIPTION | ITEM NO.
LIST OF MATERIALS

TOLERANCES
UNLESS OTHERWISE SPECIFIED REMOVE ALL BURRS & BREAK ALL SHARP EDGES.
.XX .XXX ANG
MATL
FINISH
NEXT ASSY

DO NOT SCALE DRAWING
SIGNATURES | DATE
DWN T HYLLESTED
CHK
ENG
APVD

RAMTEK
LOGIC DIAGRAM, GAME BD, HIT ME
SIZE D | SCALE | DWG NO. 550594 | REV C
SHT 5 OF 5